Bin.it Basic II

- For minimum cabinet width 300 mm
- Capacity 30 litres
- Quick and simple bottom panel installation
- Pull-out system with partial extension runner
- Frame and pull-out, powder coated steel, white
- Bin and lid, white / green plastic

Set comprises:

- 2 bins 15l white + 15l green
- Complete fitting with partial extension runner and lid
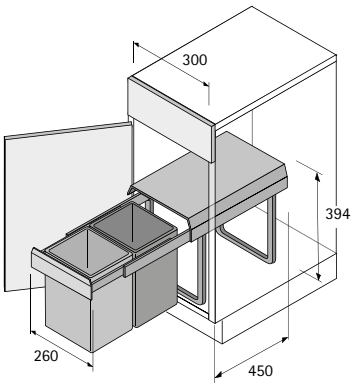
Order no.	PU
9 132 345	1 set